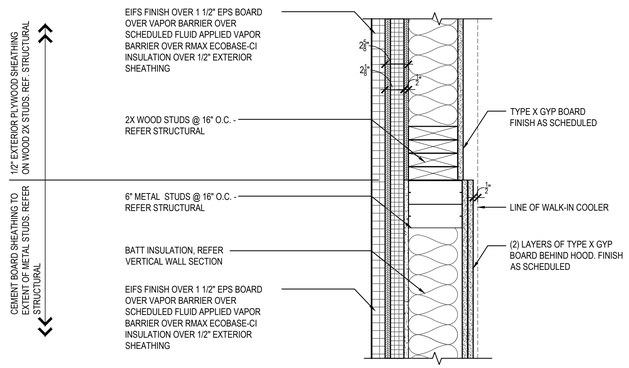

PLAN SECTION/DETAIL 09
Scale= 1 1/2" = 1'-0" A-401

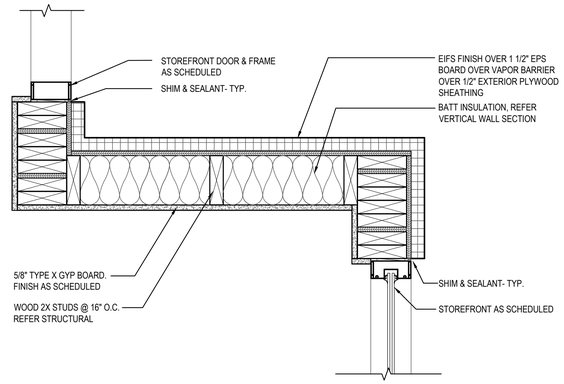

PLAN SECTION/DETAIL 06
Scale= 1 1/2" = 1'-0" A-401

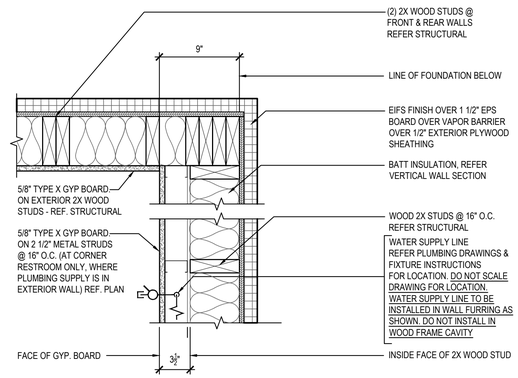

PLAN SECTION/DETAIL 03
Scale= 1 1/2" = 1'-0" A-401

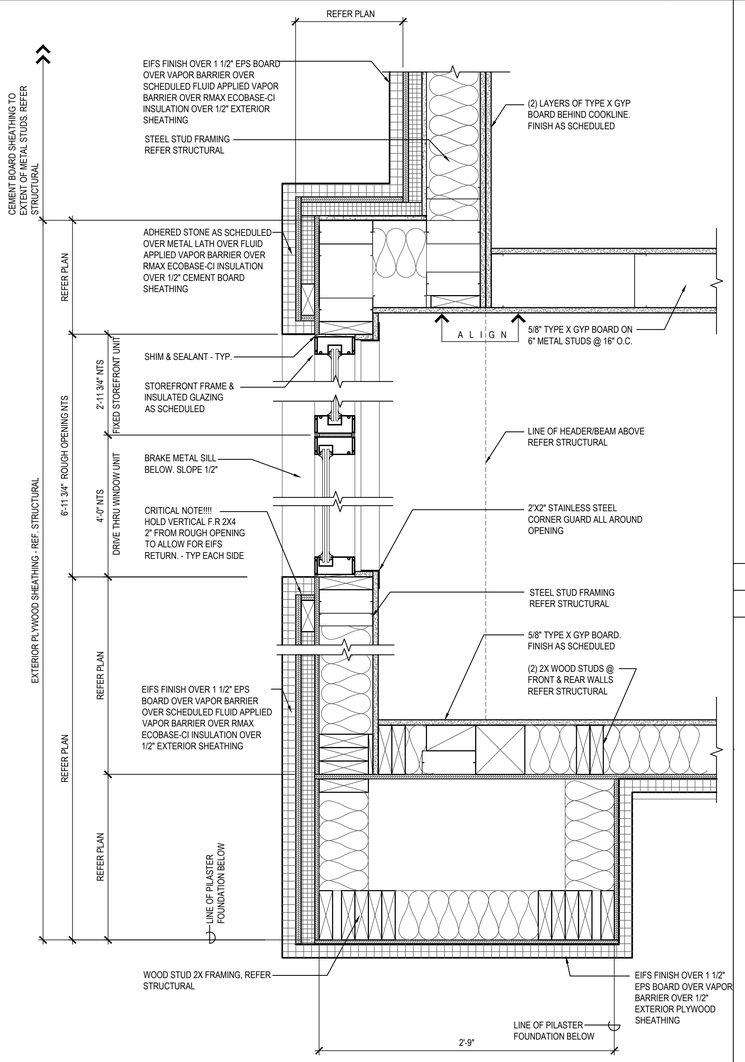

PLAN SECTION/DETAIL 08
Scale= 1 1/2" = 1'-0" A-401

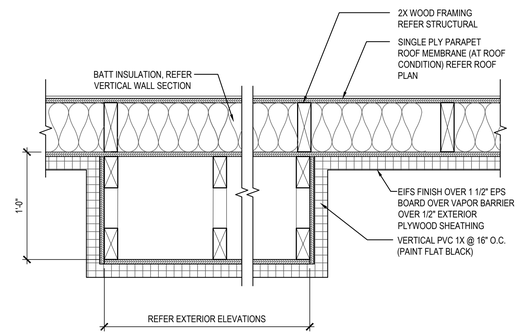

PLAN SECTION/DETAIL 05
Scale= 1 1/2" = 1'-0" A-401

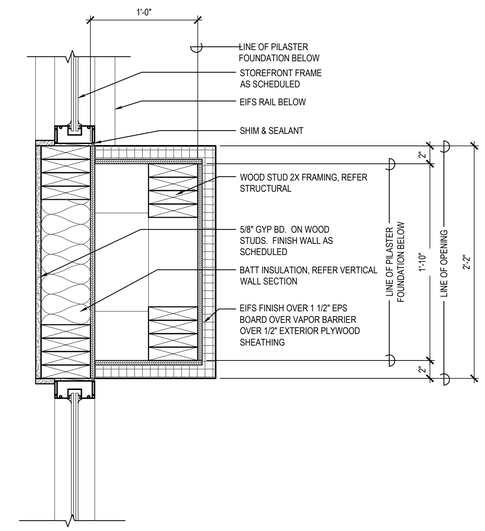

PLAN SECTION/DETAIL 02
Scale= 1 1/2" = 1'-0" A-401

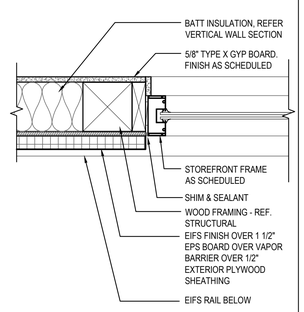

PLAN SECTION/DETAIL 07
Scale= 1 1/2" = 1'-0" A-401

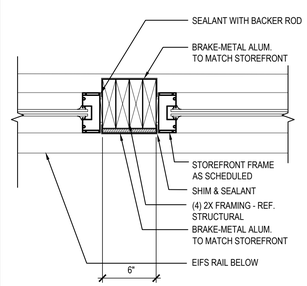

PLAN SECTION/DETAIL 04
Scale= 1 1/2" = 1'-0" A-401

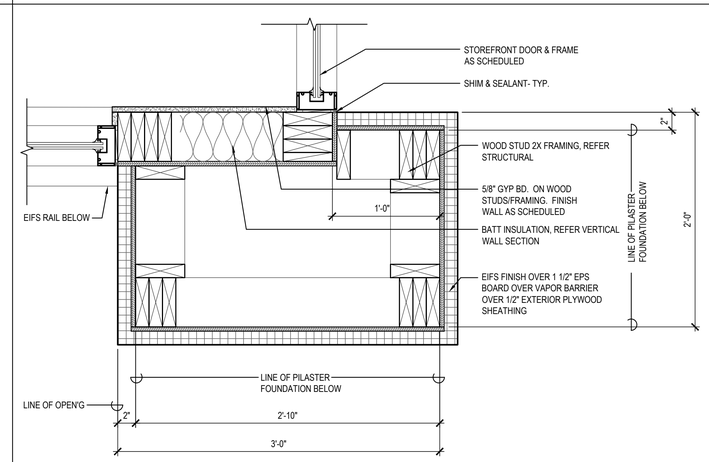

PLAN SECTION/DETAIL 01
Scale= 1 1/2" = 1'-0" A-401

PANDA RESTAURANT GROUP INC.
1683 Walnut Grove Ave.
Rosemead, California
91770
Telephone: 626.799.9898
Facsimile: 626.372.8288

All ideas, designs, arrangement and plans indicated or represented by this drawing are the property of Panda Express Inc. and were created for use on this specific project. None of these ideas, designs, arrangements or plans may be used by or disclosed to any person, firm, or corporation without the written permission of Panda Express Inc.

REVISIONS:

ISSUE DATE:

1	02.21.2020 ISSUE FOR PERMIT
2	04.23.2020 ISSUE FOR BID

DRAWN BY: JDV

PANDA PROJECT #: - S8-21-D7630
C&P PROJECT #: - 2200025

Cuhaci & Peterson
Architects Engineers Planners
1925 Prospect Ave. Orlando, FL 32814
P (407) 661-9100
F (407) 661-9101
www.cpa.com
Florida Corporate Certificate #AA C000526

04.23.2020

STATE OF GEORGIA
DALE ROBERT ULMER
CERTIFICATE NO. RA005684
REGISTERED ARCHITECT

PANDA EXPRESS

TRUE WARM AND WELCOME 2300
EXCHANGE BLVD AT LOGANVILLE HWY
BETHLEHEM, GA 30620

A-401

ARCHITECTURAL DETAILS

TRUE WARM & WELCOME 2300 R2